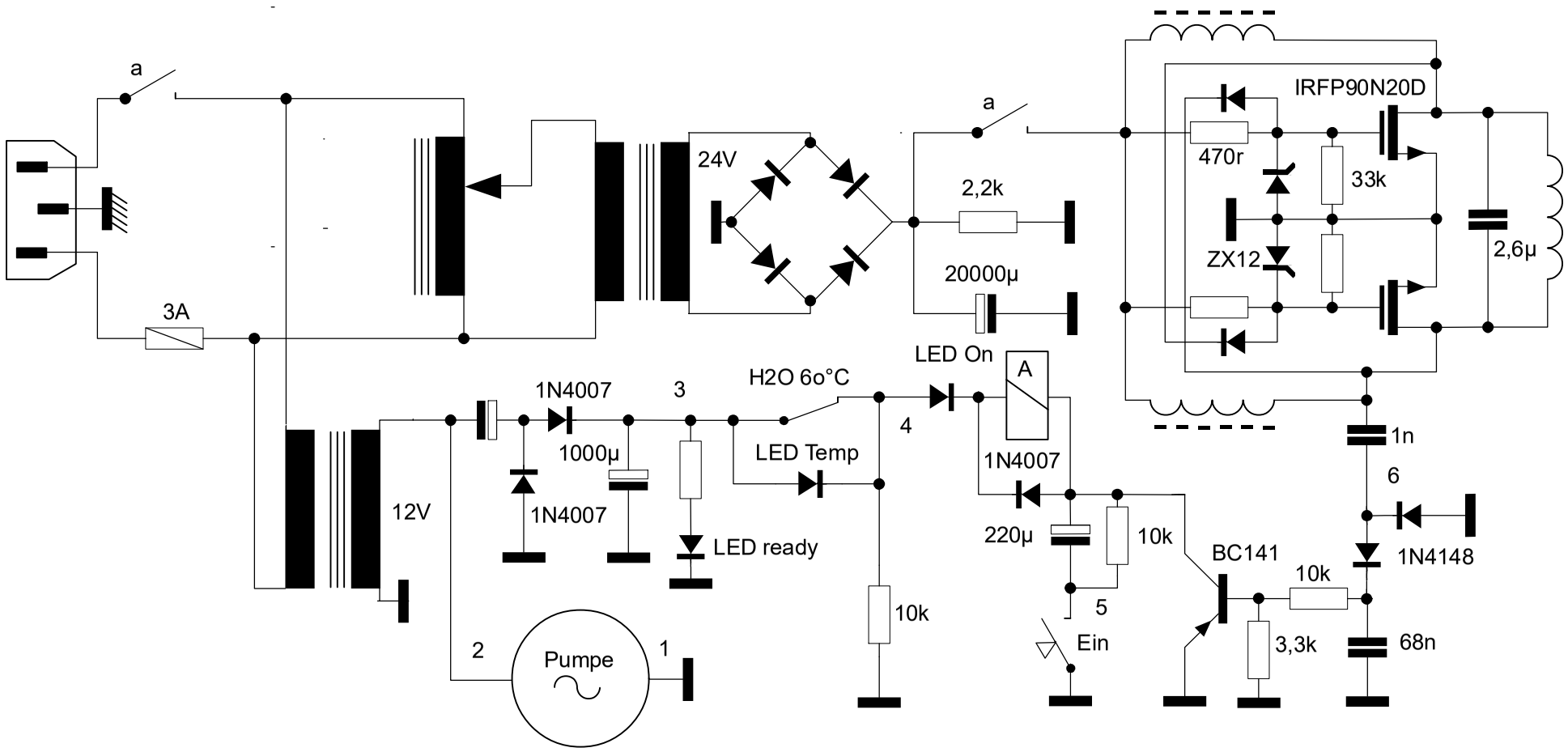
a
3A
24V
2,2k
20000µ
a
IRFP90N20D
470r
33k
ZX12
2,6µ
LED On
A
H2O 60°C
1N4007
3
1000µ
1N4007
12V
LED Temp
LED ready
4
1N4007
220µ
10k
10k
5
Ein
BC141
10k
3,3k
1n
6
1N4148
68n
2
Pumpe
1