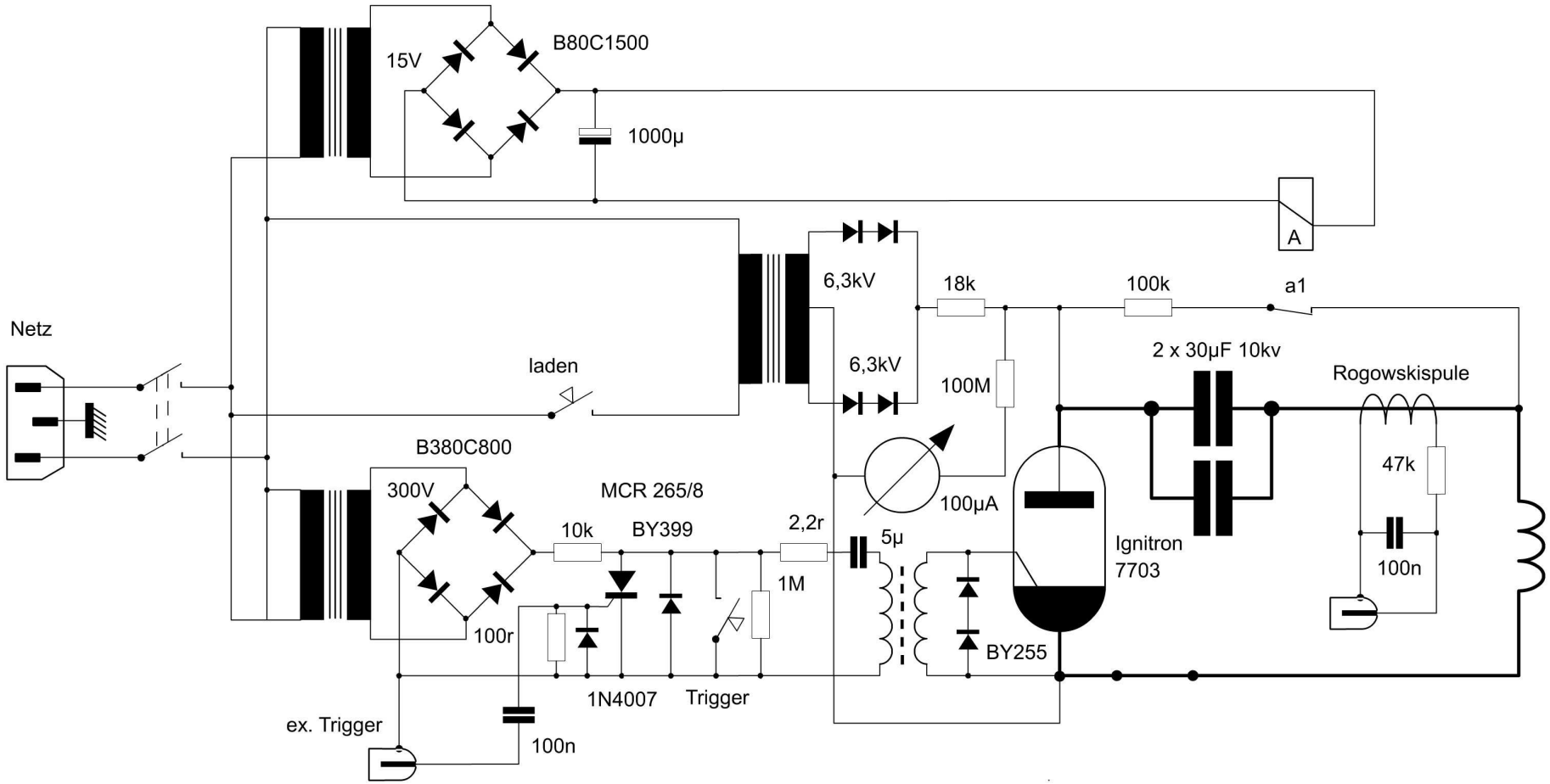
15V
B80C1500
1000µ
A
6,3kV
18k
100k
a1
Netz
laden
6,3kV
100M
2 x 30µF 10kv
Rogowskispule
B380C800
300V
MCR 265/8
100µA
47k
10k
BY399
2,2r
5µ
Ignitron
7703
100n
1M
100r
BY255
1N4007
Trigger
ex. Trigger
100n