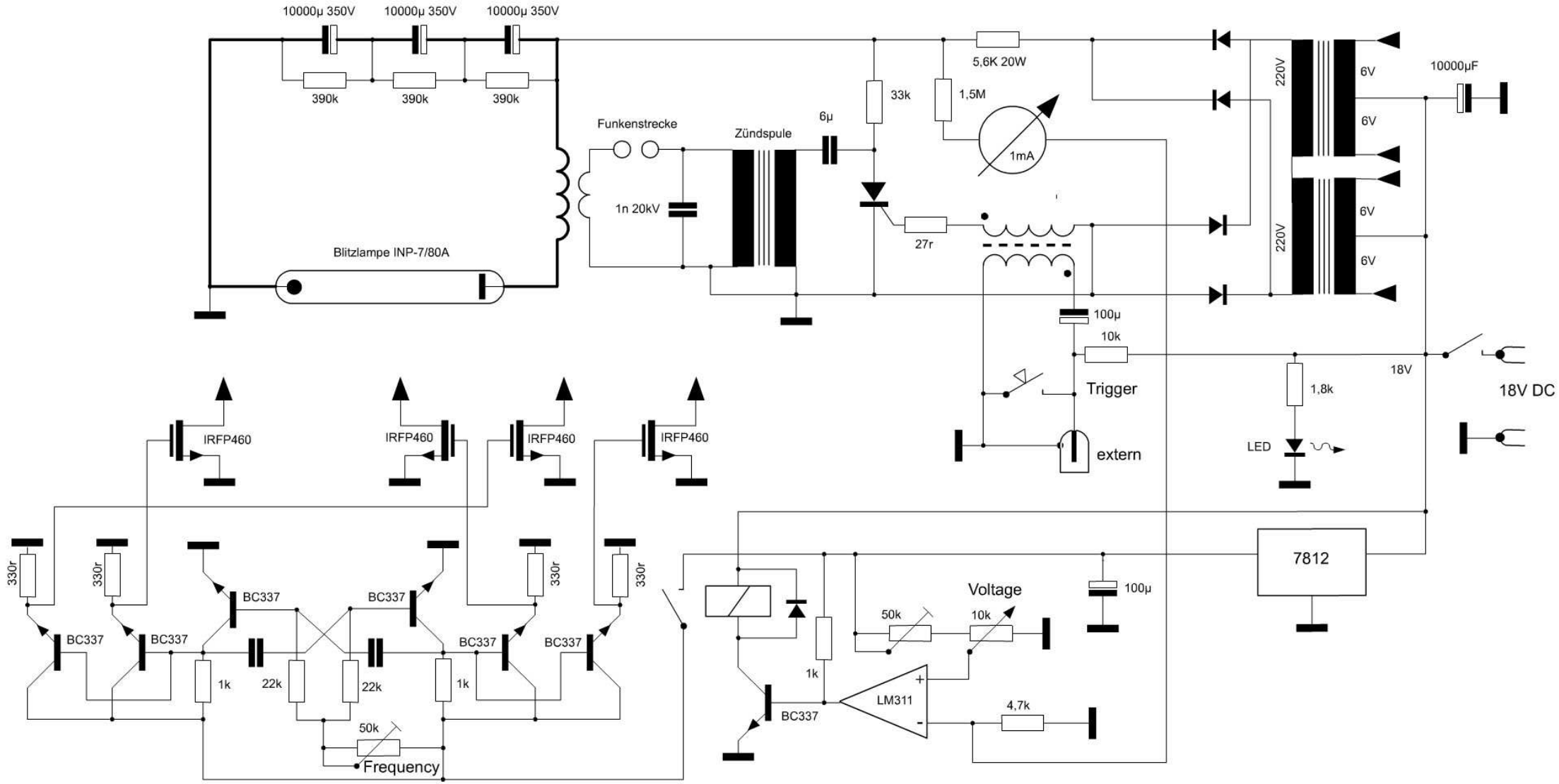
10000µ 350V
10000µ 350V
10000µ 350V
390k
390k
390k
Blitzlampe INP-7/80A
Funkenstrecke
1n 20kV
Zündspule
6µ
33k
1,5M
5,6K 20W
1mA
27r
100µ
10k
Trigger
extern
220V
220V
6V
6V
6V
6V
10000µF
18V
1,8k
LED
18V DC
IRFP460
IRFP460
IRFP460
IRFP460
330r
330r
330r
330r
BC337
BC337
BC337
BC337
BC337
BC337
1k
22k
22k
1k
50k
Frequency
7812
100µ
Voltage
50k
10k
1k
LM311
BC337
4,7k